# PLAT-FORM VERTICAL LIFTS

COMPACT
VERTICAL LIFTS
FOR GREATER
ACCESSIBILITY

ascendor® LIFTTECHNIK



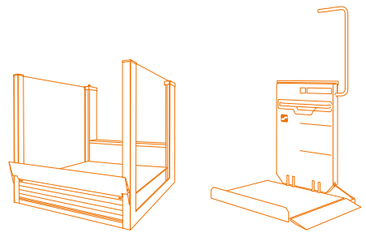

# VERSATILE IN USE

## PLAT-FORM VERTICAL LIFTS

The Ascendor PicoPorte and PLV9 platform lifts have proven themselves in both public and private use: particularly robust materials and user-friendly technologies make them an all-purpose solution for wheelchair users and people with other walking disabilities

**THE IDEAL SOLUTION FOR LIFT HEIGHTS UP TO 1.4 METRES**



**VERTICAL LIFTS** FOR INDOOR AND OUTDOOR USE

What others call luxury is standard for us. Our goal is to make your daily routine as pleasant as possible. Experience user-friendliness at the highest level and a new way of living.



**PICOPORTE** WITHOUT A SHAFT PIT



**PICOPORTE** WITH HALF-HEIGHT DOOR



**PLV9** WITH HALF-HEIGHT DOOR



On request, an airtight door can also be integrated into the masonry of the PLV9. Thanks to its **excellent thermal insulation**, the lift is thermally separated from the building.

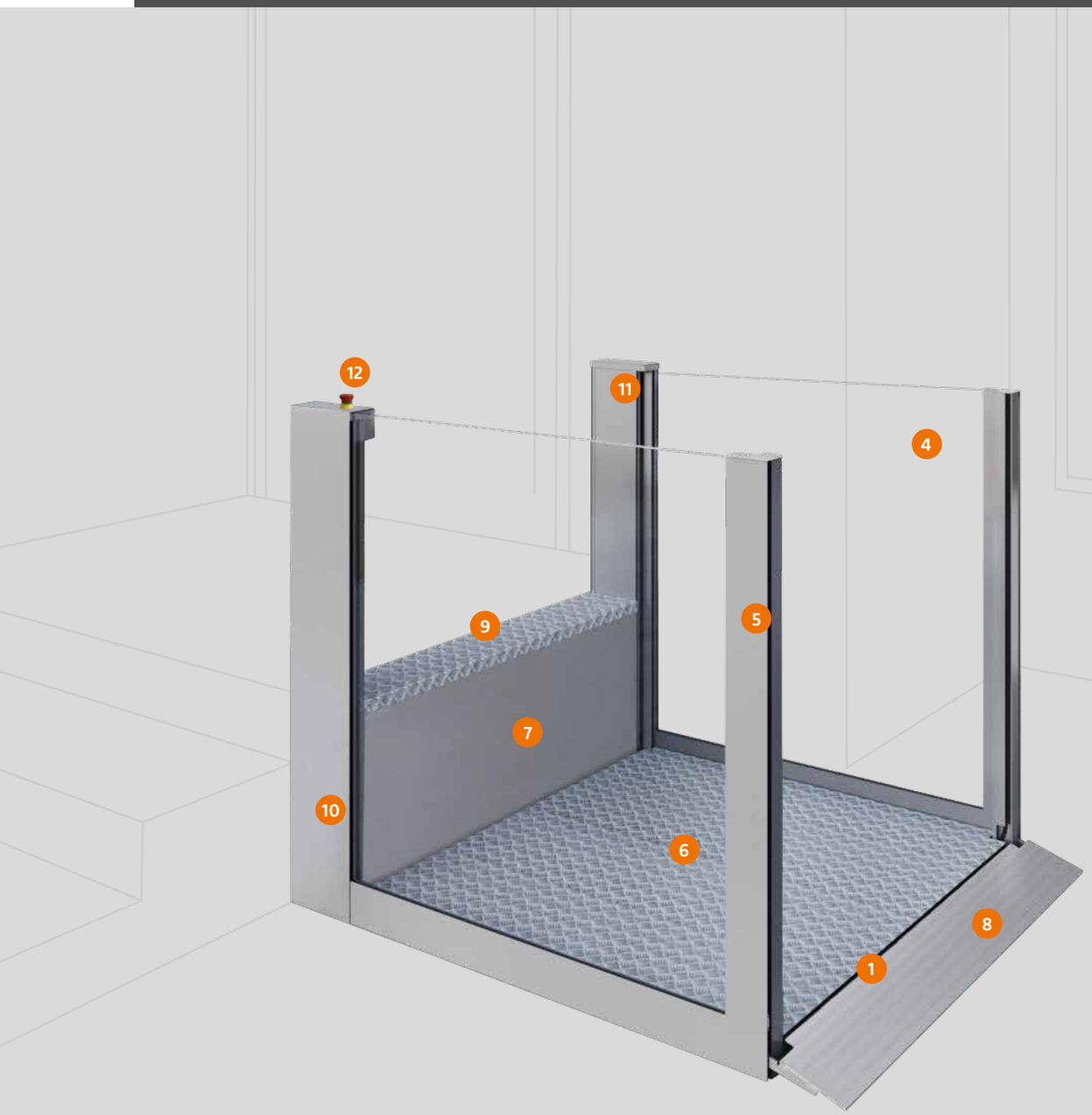


# DETAILS
## AT A GLANCE

1. Apron
2. App control
3. Wireless handheld transmitter
4. Glass panels
5. Drive unit in silver anodised
6. Platform with non-slip surface
7. Drive unit including control system
8. Access ramp
9. Non-slip exit at the top (optional with door)
10. Innovative, patent-pending chain drive
11. Optional display with error codes and menu navigation
12. Emergency stop button




BLUETOOTH
**CONTROL**




THE
HANDY
**REMOTE CONTROL**

# DETAILS AT A GLANCE

1. Automatic safety barrier
2. Surface-mounted call button
3. Radio hand-held transmitter
4. Operation on the lift
   + up-down sensor buttons
   + emergency stop button
   + emergency call button
5. Grab handle
6. Drive unit
   standard colour RAL 9006,
   optionally in RAL colour as desired
7. Power supply to the charger housing on site
8. Access ramp
9. Platform with anti-slip surface, can be folded down with the call buttons
10. Optional front access ramp available
11. Door half-height or thermally insulated in full height
12. Info colour display




OPTIONAL BLUETOOTH **CONTROL**



THE HANDY **REMOTE CONTROL**

## AREAS OF APPLICATION

- Flexibly adaptable to installation situation
- Can be used indoors and outdoors
- Many options available

## QUALITY & SAFETY

- High-quality, durable materials
- Designed for maximum operational reliability
- Reliable in daily use and low maintenance
- Quality product from Austria

## COMFORT

- Smooth, quiet ride
- For greater independence and quality of life in everyday life

In the event of a malfunction, a **colour display** provides information about the possible fault and how to rectify it. This means that 80% of all service calls can be avoided. The display also provides information about the current operating status at a glance.




| | | PicoPorte | PLV9 |
|---|---|---|---|
| Safety | Integrated fault memory | x | x |
| | Vandal-proof | x | x |
| | Emergency electrical operation | x | x |
| | 2-way emergency call system (optional) | | x |
| | SMS remote query (optional) | x | x |
| Assembly | Simple and quick installation | x | x |
| | Free-standing lifting column possible | x | x |
| | Good accessibility for maintenance | x | x |
| Design | Minimal space requirement | x | x |
| | Graphical display with status indicator | (optional) | x |
| | Standard stainless steel drive tube | | x |
| Door | Half-height door | x | x |
| | High landing door (optional) | | x |





More information about vertical lifts

# **PRODUCT** HIGHLIGHTS



With **customised special colours** the lift blends harmoniously into its surroundings: an attractive eye-catcher rather than a grey necessity – that's how beautiful mobility from ASCENDOR is!

An optional automatic voice output* ensures greater clarity.





The **very flat access ramp** enables effortless and safer driving, without any effort and with noticeably more comfort.

**The practical handheld** offers maximum ease of use at the touch of a button – reliable, intuitive and perfect for everyday use.

*Currently only possible with PLV9

# REQUIRED SPACE
## PLATFORM VERTICAL LIFT PICOPORTE

| Platform | Length | Width |
|---|---|---|
| 1200x1100 | 1566 | 1193 |

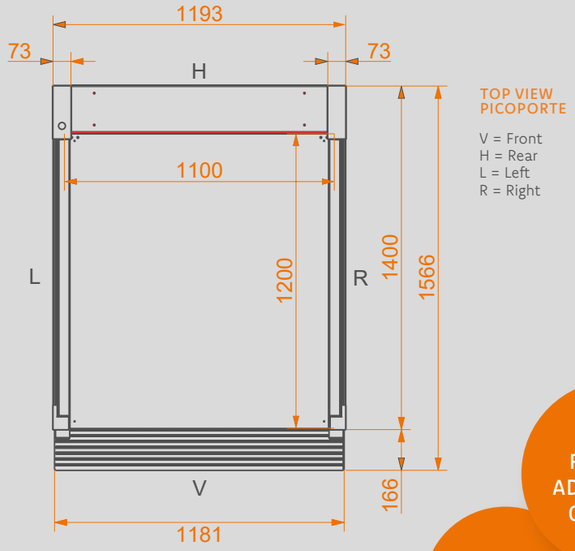


TOP VIEW PICOPORTE

V = Front
H = Rear
L = Left
R = Right

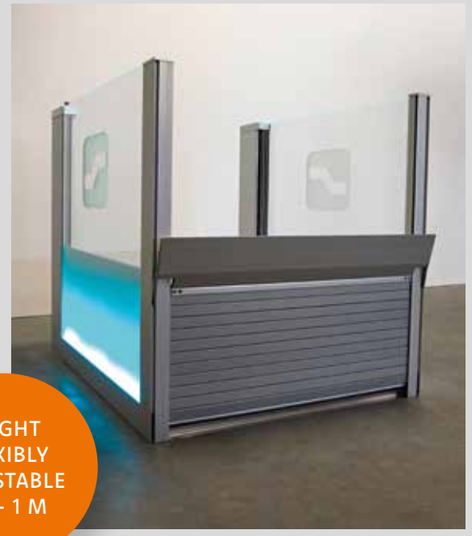

HEIGHT FLEXIBLY ADJUSTABLE 0.3 - 1 M

PLUG & PLAY CONNECTION

## ADVANTAGES

- **Fast travel** - Noticeably faster and smoother than conventional lifting platforms
- **Stable platform** - For a comfortable and safe ride
- **Lifting height up to 1 metre** - Ideal for steps, platforms or small height differences
- **Weatherproof design** - Suitable for indoor and outdoor use
- **Easy to retrofit** - Minimal space requirements, straightforward installation
- **User-friendly operation** - Intuitive control
- **Sleek design** - Blends discreetly and elegantly into any architectural setting
- **Power failure protection** - Battery operation possible until the next stop
- **Optional door** - For even greater safety, a half-height door can be fitted in the upper compartment
- **Extra slim platform** - Ensures particularly low loading height





# PICOPORTE
# TECHNICAL DATA

Click here for product video with door at the upper landing

Click here for product video without door at the upper landing

Quick installation within an hour – plug and play

## TECHNICAL DATA

- 0.3 - 1 m travel height
- 2 stops
- Travel speed max. 4.2 m/min (0.07 m/sec)
- 1050 mm passage width (without door)
- For indoor and outdoor use

## CONTROL & OPERATION

- Mobile handheld transmitter
- Wireless wall switch for external call points
- App control

## DRIVE

- Innovative chain drive (patent pending)
- 24 volt DC drive
- Connection: 100-240 V, 50/60 Hz

## COLOUR / MATERIALS

- Anodised aluminium (silver)
- Side glass panels
- Anodised, anti-slip aluminium tear plate

## SPACE REQUIREMENTS

- 1566 x 1193 mm (LxW)

## LOAD CAPACITY

- 300 kg

## TECHNOLOGY

- Integrated error memory
- Numerous setting options
- Battery protection function

## PLATFORM

- 1200 x 1100 mm (LxW)
- Low ramp height (approx. 6 cm)

## DOOR (OPTIONAL)

- Half-height door in upper stop
- Door drive
- 930 mm passage width

## ASSEMBLY

- Easy retrofitting
- No pit required due to flexible access ramp

## OPTIONS

- RGB lighting
- Display
- Mounting column for wall switch
- SMS remote query
- High guardrail (fall protection)
- Platform-mounted control unit
- Side entry (rotated by 90°)

# PLV9
# TECHNICAL DATA

Click here for product video

## SECURITY LOCK

- Door for upper stop with safety lock
- Optionally also available with door drive

## DRIVE SYSTEM

- 2 stainless steel tubes with rack

## COLOUR

- Standard RAL 9006

## FREESTANDING INSTALLATION

- Possible with support structure

## STOPS

- 2 stops

## BATTERY OPERATION

## CONTROL

- Push-button operation with radio remote control

## LOAD CAPACITY

- 225 kg standard

## PLATFORM SIZES IN MM

- 800 x 650*, 800 x 710*, 800 x 760*, 800 x 800
- 900 x 760*, 900 x 800
- 1000 x 710*, 1000 x 760*, 1000 x 800, 1000 x 900*
- 1210 x 830*, 1250 x 800, 1300 x 800*

*Option with extra charge

## TRAVEL HEIGHT

- Max. 1,4 m

## SPEED

- Max. 9 m/min

## SPACE REQUIREMENT FOR WALL MOUNTING

- Closed 340 mm
- Open 1055 mm

## ADVANTAGES

- For indoor and outdoor use
- Foldable platform
- Smooth ride
- Space-saving design
- No pit required
- Reusable without conversion
- Easy retrofitting



# REQUIRED SPACE PLATFORM VERTICAL LIFT PLV9

| | Standard | Incl. running face* | Wall mounting | Support assembly incl. support to the rear 80x60 | Support assembly free-standing 100x80 |
|---|---|---|---|---|---|
| | Length L | Length L | Width W | Width W | Width W |
| 800x650* | 1015 | 1075 | 905 | 1125 | 1225 |
| 800x710* | 1015 | 1075 | 965 | 1185 | 1285 |
| 800x760* | 1015 | 1075 | 1015 | 1235 | 1335 |
| 800x800 | 1015 | 1075 | 1055 | 1275 | 1375 |
| 900x760* | 1115 | 1175 | 1015 | 1235 | 1335 |
| 900x800 | 1115 | 1175 | 1055 | 1275 | 1375 |
| 1000x710* | 1215 | 1275 | 965 | 1185 | 1285 |
| 1000x760* | 1215 | 1275 | 1015 | 1235 | 1335 |
| 1000x800 | 1215 | 1275 | 1055 | 1275 | 1375 |
| 1000x900* | 1215 | 1275 | 1155 | 1375 | 1475 |
| 1210x830* | 1425 | 1485 | 1085 | 1305 | 1405 |
| 1250x800 | 1465 | 1525 | 1055 | 1275 | 1375 |
| 1300x800* | 1515 | 1575 | 1055 | 1275 | 1375 |
| | | | | Foundation min. 700x370mm ( l x w ), depth frostproof | Foundation min. 700x470mm ( l x w ), depth frostproof |
| | | | Platform folded 340mm | Platform folded 560mm | Platform folded 660mm |

*Option with surcharge

ATTENTION: All specified dimensions may vary depending on the project.

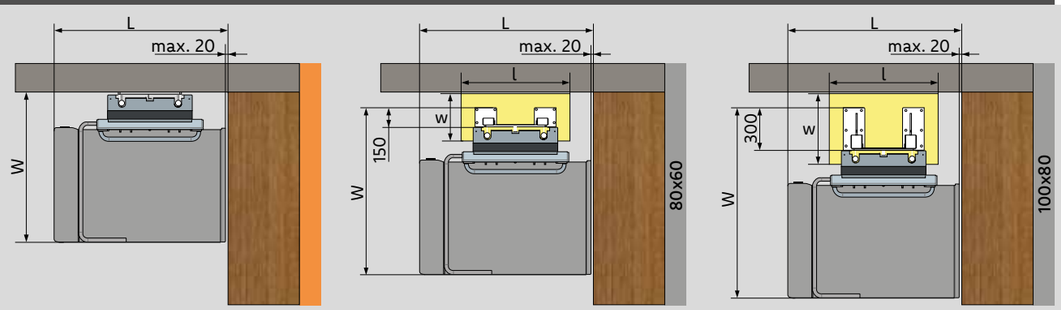

**ASCENDOR** LIFTTECHNIK

# **ASCENDOR** PRODUCT WORLD



## PLATFORM STAIRLIFT

- True space miracle
- Integrated fault memory
- Stainless steel handrail
- Easy assembly

Click here for product video

## QUATTROPORTE

- Weatherproof for outdoor use
- No shaft necessary
- Thermally insulated doors
- Simple and elegant

Click here for product video





## UNAPORTE

- No shaft necessary
- Simple and quick assembly
- Reliable door lock
- Rustproof aluminium lifting column

Click here for product video

## DURAPORTE

- Quick assembly
- Patented know-how
- Modern design
- Doors possible on all sides

Click here for product video



ASCENDOR

# INNOVATIVE LOCATION

REGIONAL ANCHORED, GLOBAL ALIGNED




**MADE in AUSTRIA**

Our company's headquarters along with our design and production are located in Austria. We aim to set new standards with our lifts in terms of design, safety and quality.

Research and Development is our top priority and we have a highly qualified and motivated team of Designers and Mechatronic Engineers dedicated to this task.

**CERTIFIED QUALITY**







ascendor® LIFTTECHNIK

**Ascendor GmbH**
Pürnstein 43 · 4120 Neufelden · Austria
Tel.: +43 7282 21900 · office@ascendor.at
**ascendor.com**

Subject to errors and changes.

V 09/2026